www.xpg.com




# XPG GAMMIX S60 BLADE PCIe Gen4 x4 M.2 2280 Solid State Drive

Can you call yourself an ace without absolute confidence? The GAMMIX S60 delivers sequential read/write performance of up to 5,000/4,200MB/s. It is fully compatible with Intel/AMD platforms and is a superior expansion device for the PS5 console. Incredible performance, perfect form factor, and beloved by gamers everywhere.

## Features

- R/W speed up to 5,000/4,200MB/s for PC/laptop
- Ultra-fast PCIe Gen4 x4 interface
- Compliant with NVMe 1.4
- Work with PS5
- Capacity up to 2TB
- SLC Caching and Host memory buffer
- Advanced LDPC ECC Technology
- Encryption support
- Compact M.2 2280 form factor – ideal for gaming and high-end desktops

## Ordering Information

| Capacity | Model Number | EAC Code |
|---|---|---|
| **2TB** | AGAMMIXS60-2T-CS | 4711085946164 |
| **1TB** | AGAMMIXS60-1T-CS | 4711085946157 |






www.xpg.com

# Specifications

- Capacities: 1TB / 2TB
- NAND Flash: 3D NAND
- Interface: PCIe Gen4 x4
- Form Factor: M.2 2280
- Sequential read/write (Max.):
  Up to 5,000/4,200MB/s (PC/laptop)
- Operating Temperature: 0°C~70°C
- Storage Temperature: -40°C~85°C
- Shock Resistance: 1500G/0.5ms
- Weight:
  8g / 0.28oz (with heat sink)
  7g / 0.24oz (without heat sink)
- Dimensions (L x W x T):
  80 x 22 x 3.13mm (with heatsink)
  80 x 22 x 2.15mm (without heatsink)
- Terabytes Written (TBW)(Max. capacity): 450TB
- MTBF: 1,500,000 hours
- Warranty: 5-year limited
- Certifications: CE, FCC, BSMI, KC, EAC, RCM, UKCA, RoHS

# Performance

| Capacity | Sequential Performance (Up to)[1] | | TBW[3] |
|---|---|---|---|
| | Read (MB/s) | Write (MB/s) | |
| 2TB | 5,000 | 4,200 | 450TB |
| 1TB | 5,000 | 3,200 | 250TB |

[1]M/B: MSI X570 GAMING PLUS MAX, CPU: AMD Ryzen 7 3700X 8-Core Processor @ 3.60GHZ, RAM: ADATA 8G DDR4-266MHz, OS: Windows 10 64bit, Software: CDM V7.0.0 / HD Tune Pro 5.60
[2]Performance may vary based on SSD capacity, hardware test platform, test software, operating system and other system variables
[3]The value is the minimum amount of terabyte written that could be reached.

# Schematics

**<With heatsink>**

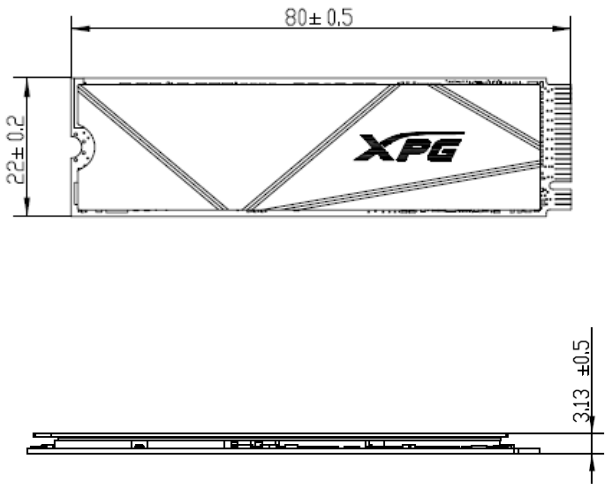


**<Without heatsink>**

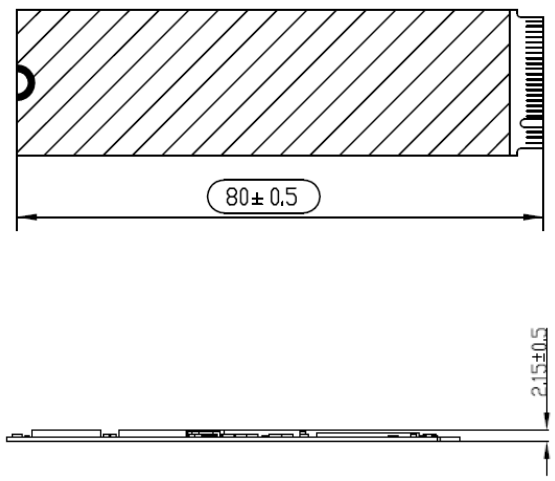


ADATA Technology Co., Ltd
25F., No. 539, Tanmei St.,
Neihu Dist., Taipei City 114 , Taiwan
T: +886-2-8228-0886
F: +886-2-8228-0887
E: adata@adata.com